CUSTOMER INSTALLATION GUIDE

# Heat Pump Pre-Delivery Guide

Gecko in.temp | 7.5 kW air-source heat pump



## Preparing for your installation

Our installation team will connect and install your heat pump. This guide explains the site preparation, positioning and electrical arrangements to have in place before we arrive.

# Product overview

The Gecko in.temp integrates with compatible spa controls to heat or cool the water. It offers six operating modes, including energy-saving and electric-only options.

## Dimensions and weight

| Model | Part # |
|---|---|
| IN.TEMP-H5.0-CE | 0615-807002 |
| IN.TEMP-H7.5-CE | 0615-807003 |
| IN.TEMP-H5.0 | 0615-807000 |
| IN.TEMP-H7.5 | 0615-807001 |

**in.temp dimensions**

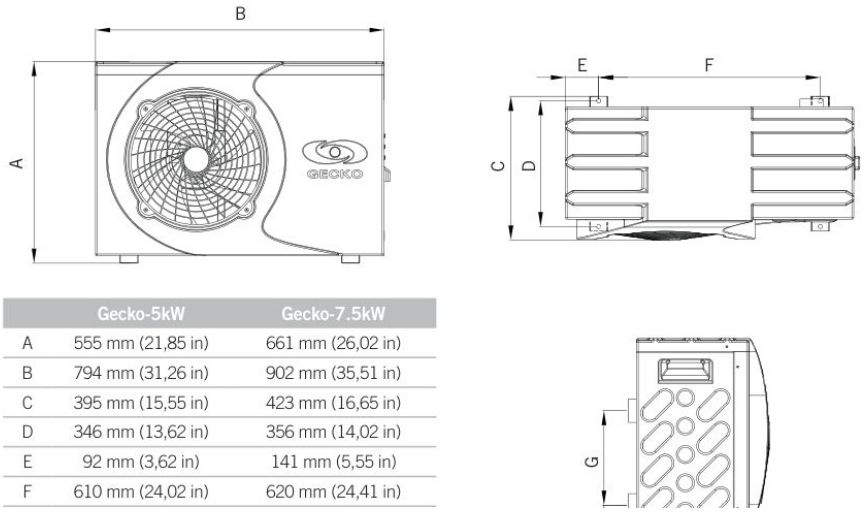


| | Gecko-5kW | Gecko-7.5kW |
|---|---|---|
| A | 555 mm (21,85 in) | 661 mm (26,02 in) |
| B | 794 mm (31,26 in) | 902 mm (35,51 in) |
| C | 395 mm (15,55 in) | 423 mm (16,65 in) |
| D | 346 mm (13,62 in) | 356 mm (14,02 in) |
| E | 92 mm (3,62 in) | 141 mm (5,55 in) |
| F | 610 mm (24,02 in) | 620 mm (24,41 in) |

Manufacturer dimension drawing (Gecko TechBook, p. 7).

| Specification | 7.5 kW model |
|---|---|
| Width × depth × height | 902 × 423 × 661 mm |
| Net weight | 45 kg |

## Compatibility

Compatible Gecko in.ye and in.yt controls require an RS-485 interface and suitable software. Some in.ye-V3 systems require an additional board. Ask our team to confirm compatibility before installation.

# Site preparation

## Base and positioning

Prepare a solid, stable, flat pad with a slight rearward slope for drainage. Choose a well-ventilated outdoor location within 3 metres of the spa, as recommended by our installation team, to minimise pipework heat loss.

## Airflow and access

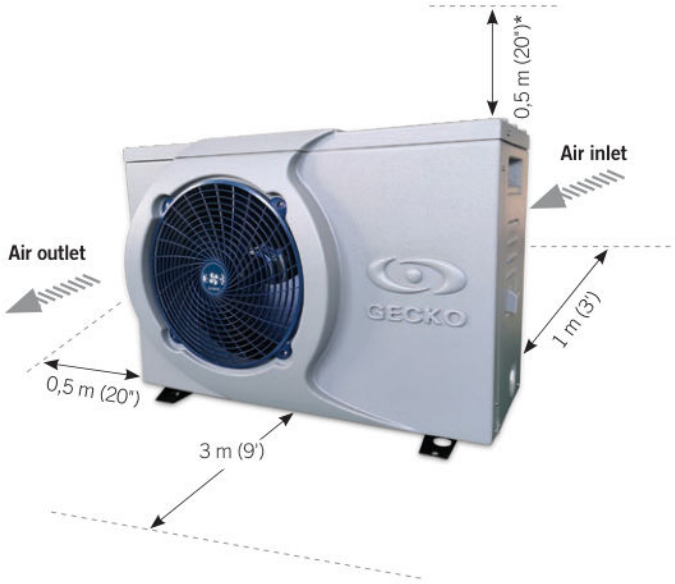


Manufacturer clearance diagram (Gecko TechBook, p. 12).

**Front (outlet):** 3 m | **Rear (inlet):** 1 m
**Sides:** 0.5 m | **Above:** 0.5 m recommended for servicing.

Keep airflow unobstructed. Avoid enclosed spaces and locations close to bedrooms or where the fan blows towards walls, windows or occupied areas.

## Drainage

Condensation is normal during heating and may produce several litres of water per hour in humid conditions. Ensure water can drain away without affecting nearby electrical equipment or materials.

# Electrical and installation

## Electrical supply

For our standard installation, the heat pump connects directly to the compatible spa control pack and uses the spa electrical supply. No separate socket or additional dedicated circuit is required for the heat pump.

The spa itself must still meet its model-specific electrical requirements. If you are preparing a new spa installation, follow its separate pre-delivery guide and consult a qualified electrician.

## Plumbing and connection

Our installation team will handle the heat pump connections, including the insulated external pipework and bypass valves. Customers should not attempt to wire or connect the unit themselves.

The in.temp should be securely fixed. The four included rubber mounts should be installed to absorb high-frequency vibrations.

**Piping**

A bypass, consisting of three valves, must be installed to adjust water flow to the in.temp and to isolate the apparatus for maintenance purpose. For a more stable flow in the heat exchanger, it is recommended to install the in.temp on the pressure side of the main pump.

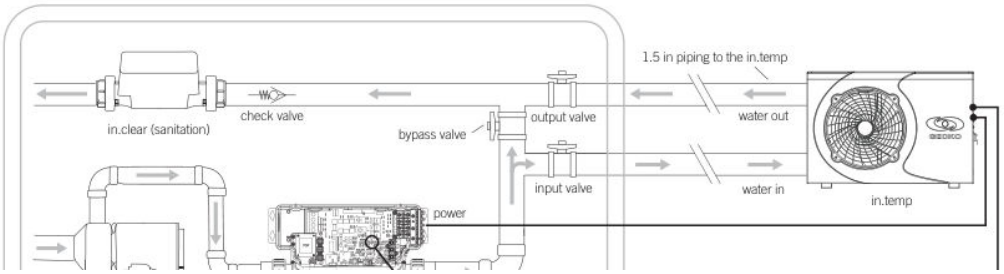


Manufacturer system connection illustration (Gecko TechBook, p. 13). For reference only; not a DIY installation instruction.

## Access on installation day

Keep the proposed location and route to the spa clear so the installation team can access the equipment and make the required connections.

# Technical specifications

Gecko in.temp 7.5 kW, European (CE) model.

| Specification | Manufacturer rating |
|---|---|
| Ambient operating range | -5°C to 43°C |
| Water resistance | IPX4 |
| Electrical input | 220–240 V, 50 Hz |
| Maximum electrical input / current | 1.91 kW / 8.67 A |
| Rated current | 5.49 A |
| Minimum / best efficiency flow | 1.14 / 3.41 m³/h |
| Noise at 1 m | 56.5 dB(A) |
| Heating capacity / COP (1) | 7.52 kW / 6.13 |
| Heating capacity / COP (2) | 5.63 kW / 4.48 |
| Cooling capacity / EER (3) | 6.24 kW / 3.58 |
| Refrigerant | R32 / 800 g |

(1) Air 24°C, inlet water 26°C. (2) Air 15°C, inlet water 26°C. (3) Air 35°C, inlet water 29°C. Performance varies with operating conditions. Source: Gecko TechBook, p. 19 / HP Specifications.

# Pre-delivery checklist

Before your installation appointment, please check the following:

[ ] A solid, stable pad is prepared with provision for drainage.

[ ] The proposed heat pump location is within 3 metres of the spa.

[ ] The recommended airflow clearances are available.

[ ] The installation area and access route are clear.

[ ] The spa electrical supply meets its own installation requirements.

[ ] Any questions about compatibility or positioning have been discussed with our team.

## After installation

Keep air inlets and outlets free of leaves and debris. Contact our support team for servicing or winterisation advice. Do not dismantle or service the heat pump yourself.

## Need help?

Contact London Essex Outdoor Living before your appointment if you are unsure about any preparation requirements.

support@londonessexoutdoorliving.co.uk

Technical reference: Gecko in.temp TechBook, revision 09-2022; 7.5 kW CE specifications.